# GF5045-150T1

**Reverse Voltage - 45 Volts**
**Forward Current - 30 Amperes**

Bypass Diode Module For PV

## Features

- Metal of silicon rectifier, majority carrier conduction
- Guard ring for transient protection
- Low power loss, high efficiency
- High current capability, low IR
- High surge capacity
- High temperature reverse characteristic is excellent
- For use in photovoltaic solar cell protection
  Trench Schottky rectifier

## Mechanical Data

- Polarity: As marked on Body
- Mounting position: Any

**JK09E**

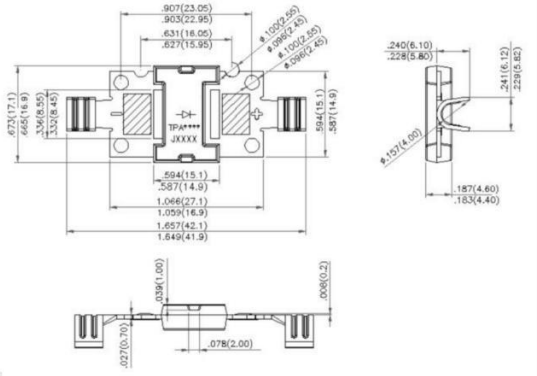


Dimensions in inches and (millimeters)

## Maximum Ratings and Electrical Characteristics

Rating at 25℃ ambient temperature unless otherwise specified.
Single phase, half wave ,60Hz, resistive or inductive load.
For capacitive load ,derate current by 20%

| Characteristics | SYM | GF5045-150T1 | Unit |
|---|---|---|---|
| Maximum Recurrent Peak Reverse Voltage | $V_{RRM}$ | 45 | V |
| Maximum RMS Voltage | $V_{RMS}$ | 31.5 | V |
| Maximum DC Blocking Voltage | $V_{DC}$ | 45 | V |
| Maximum Average Forward Rectified Current @Tc=125℃ | $I_{(AV)}$ | 30 | A |
| Peak Forward Surge Current 8.3ms single half sine-wave super imposed on rated load (JEDEC Method) | $I_{FSM}$ | 400 | A |
| Peak Forward Voltage Per Diode at 30A DC (Note l) | VF | 0.51 | V |
| Maximum DC Reverse Current at Rated @TJ=25℃ | $I_R$ | 0.1 | mA |
| DC Blocking Voltage Per Diode @$T_J$=100℃ | | 40 | |
| Typical Thermal Resistance (Note2) | $R_{\theta JC}$ | 1.5 | ℃/W |
| Operating Junction Temperature Range | $T_J$ | -55 to +150 | ℃ |
| Storage Temperature Range | $T_{STG}$ | -55 to +150 | ℃ |
| Junction Temperature In DC forward current without reverse bias, t ≤ 1 h (Note3) | $T_J$ | ≤200 | ℃ |

NOTES:1.300us Pulse Width, 2% Duty Cycle.
2.Thermal Resistance Junction to case (without heatsink)
3. Meets the Requirements of IEC 61215 bypass diode thermal test

# GF6045-180T1

| Photovoltaic Solar Cell Protection Schottky Diode | Bypass Diode for Solar J-Box |
|---|---|

## Features

- Low power loss, high efficiency
- High current capability, low $V_F$
- High surge capacity
- Guard ring for trasient protection
- For use in solarJ-box as a bypass diode
- Metal of silicon rectifier, majority carrier conduction

## Mechanical Data

- Polarity: Color band denotes cathode
- Mounting position: Any

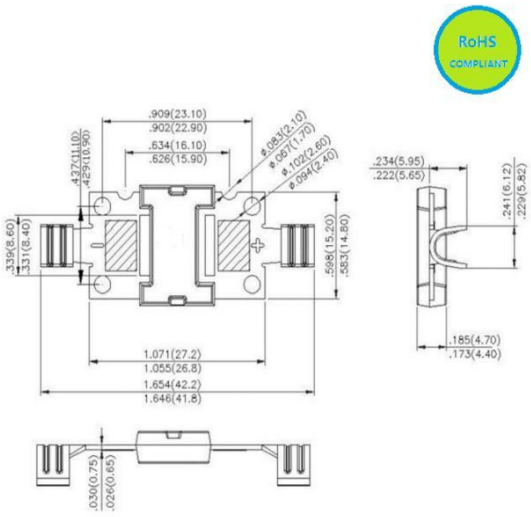


Package Outline Dimensions in Inches (Millimeters)

## Maximum Ratings and Electrical Characteristics

Rating at 25℃ ambient temperature unless otherwise specified.

Single phase, half wave, 60Hz, resistive or inductive load.

For capacitive load, derate current by 20%.

| Characteristics | | SYM | GF6045-180T1 | Unit |
|---|---|---|---|---|
| Maximum Repetitive Peak Reverse Voltage | | $V_{RRM}$ | 45 | V |
| Maximum RMS Voltage | | $V_{RMS}$ | 31.5 | V |
| Maximum DC Blocking Voltage | | $V_{DC}$ | 45 | V |
| Maximum Average Forward Rectified Current @ Tc=125 °C | | $I_{(AV)}$ | 45 | A |
| Peak Forward Surge Current, 8.3mS Single Half Sine-Wave, Superimposed on Rated Load ( JEDEC Method ) | | $I_{FSM}$ | 500 | A |
| Peak Forward Voltage at 40A DC ( Note1 ) | | $V_F$ | 0.52 | V |
| Maximun DC Reverse Current at Rated DC Blocking Voltage | @$T_J$=25℃ | $I_R$ | 0.1 | mA |
| | @$T_J$=100°C | | 10 | |
| Typical Thermal Resistance Junction to Case | | $R_{\theta JC}$ | 1 | ℃/W |
| Junction Temperature Range | | $T_J$ | -55 to+200 | ℃ |
| Storage Temperature Range | | $T_{STG}$ | -55 to+150 | ℃ |

Notes: 1. 300uS pulse width, 2%duty cycle.

2. The typical data above is for reference only.


Tel:+86 0355-7199555 Email:ZKANRUI@zkanrui.cn

Corporate Office: Floor 2, Building 5, 5G Smart Innovation Park, 53 Baoyuan Road, Luzhou District, Changzhi City, Shanxi Province, China

Sales Center: Room 1107, 11/F, Guokun Huake Tower, No.345 Yanxin Road, Huishan District, Wuxi City, Jiangsu Province, China

# GF6045-150T2

**Reverse Voltage - 45 Volts**
**Forward Current - 30 Amperes**

**BypassDiodeModuleForPV**

## Features

- Metal of silicon rectifier, majority carrier conduction
- Guard ring for transient protection
- Low power loss, high efficiency
- High current capability, low IR
- High surge capacity
- High temperature reverse characteristic is excellent
- For use in photovoltaic solar cell protection
  Trench Schottky rectifier

### Mechanical Data

- Polarity: As marked on Body
- Mounting position: Any

**JK09E**

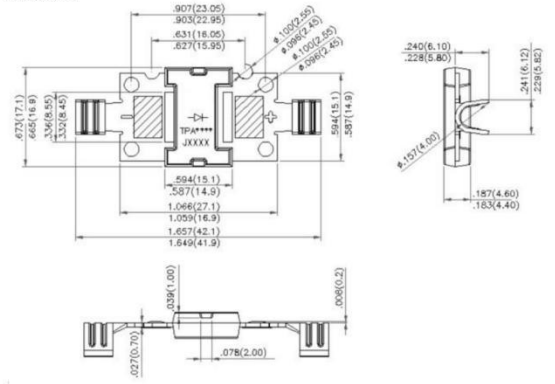


Dimensions in inches and (millimeters)

## Maximum Ratings and Electrical Characteristics

Rating at 25℃ ambient temperature unless otherwise specified.
Single phase, half wave ,60Hz, resistive or inductive load.
For capacitive load ,derate current by 20%

| Characteristics | SYM | GF6045-150T2 | Unit |
|---|---|---|---|
| Maximum Recurrent Peak Reverse Voltage | $V_{RRM}$ | 45 | V |
| Maximum RMS Voltage | $V_{RMS}$ | 31.5 | V |
| Maximum DC Blocking Voltage | $V_{DC}$ | 45 | V |
| Maximum Average Forward Rectified Current @Tc=125℃ | $I_{(AV)}$ | 60 | A |
| Peak Forward Surge Current 8.3ms single half sine-wave super imposed on rated load (JEDEC Method) | $I_{FSM}$ | 400 | A |
| Peak Forward Voltage Per Diode at 30A DC (Note l) | VF | 0.51 | V |
| Maximum DC Reverse Current at Rated @TJ=25℃ DC Blocking Voltage Per Diode @$T_J$=100℃ | $I_R$ | 0.2 | mA |
| | | 150 | |
| Typical Thermal Resistance (Note2) | $R_{\theta JC}$ | 1.5 | ℃/W |
| Operating Junction Temperature Range | $T_J$ | -55 to +150 | ℃ |
| Storage Temperature Range | $T_{STG}$ | -55 to +150 | ℃ |
| Junction Temperature In DC forward current without reverse bias, t ≤ 1 h (Note3) | $T_J$ | ≤200 | ℃ |

NOTES:1.300us Pulse Width, 2% Duty Cycle.
2.Thermal Resistance Junction to case (without heatsink)
3. Meets the Requirements of IEC 61215 bypass diode thermal test

# JUM4045-150T1

**Photovoltaic Solar Cell Protection Schottky Diode**

**Bypass Diode for Solar J-Box Forward Current - 40 Amperes**

## Features

- Low power loss, high efficiency
- High current capability, low $V_F$
- High surge capacity
- Guard ring for trasient protection
- For use in solarJ-box as a bypass diode
- Metal of silicon rectifier, majority carrier conduction

## Mechanical Data

- Molded plastic body Molding compound meets UL 94 V-0 flammability rating
- Polarity: Color band denotes cathode
- Mounting position: Any

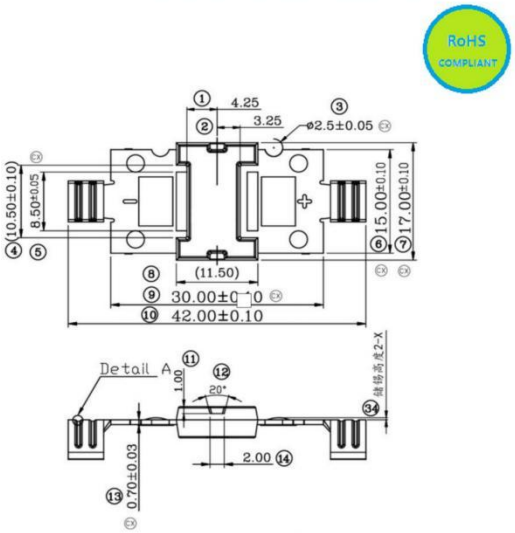


Package Outline Dimensions in Inches (Millimeters)

## Maximum Ratings and Electrical Characteristics

Rating at 25℃ ambient temperature unless otherwise specified.
Single phase, half wave, 60Hz, resistive or inductive load.
For capacitive load, derate current by 20%.

| Characteristics | | SYM | JUM4045-150T1 | Unit |
|---|---|---|---|---|
| Maximum Repetitive Peak Reverse Voltage | | $V_{RRM}$ | 45 | V |
| Maximum RMS Voltage | | $V_{RMS}$ | 31.5 | V |
| Maximum DC Blocking Voltage | | $V_{DC}$ | 45 | V |
| Maximum Average Forward Rectified Current @ Tc=125 °C | | $I_{(AV)}$ | 40 | A |
| Peak Forward Surge Current, 8.3mS Single Half Sine-Wave, Superimposed on Rated Load ( JEDEC Method ) | | $I_{FSM}$ | 450 | A |
| Peak Forward Voltage at 40A DC ( Note1 ) | | $V_F$ | 0.52 | V |
| Maximun DC Reverse Current at Rated DC Blocking Voltage | @$T_J$=25℃ | $I_R$ | 0.06 | mA |
| | @$T_J$=100°C | | 15 | |
| Typical Thermal Resistance Junction to Case | | $R_{\theta JC}$ | 1 | ℃/W |
| Junction Temperature Range | | $T_J$ | -55 to+200 | ℃ |
| Storage Temperature Range | | $T_{STG}$ | -55 to+150 | ℃ |

Notes: 1. 300uS pulse width, 2%duty cycle.
2. The typical data above is for reference only.


Tel:+86 0355-7199555 Email:ZKANRUI@zkanrui.cn
Corporate Office: Floor 2, Building 5, 5G Smart Innovation Park, 53 Baoyuan Road, Luzhou District, Changzhi City, Shanxi Province, China
Sales Center: Room 1107, 11/F, Guokun Huake Tower, No.345 Yanxin Road, Huishan District, Wuxi City, Jiangsu Province, China

| ZKANRUI | Specification number ZKAR2026012 | Diode Product Specification |
|---|---|---|
| Page1,1page in total | Revision A0 | **Shanxi Zhongke Anrui Energy Technology Co., Ltd.** |

# JUM5045-180T1

**Photovoltaic Solar Cell Protection Schottky Diode**

**Bypass Diode Module For PV Forward Current - 50 Amperes**

## Features

- Low power loss, high efficiency
- High surge current capabity
- Guardring for overvoltage potection
- High temperature reverse characteristic is excellent
- Trench Schottky Technology
- Metal of silicon rectifier, majority carrier conduction

## Mechanical Data

- Molded plastic body Molding compound meets UL 94 V-0 flammability rating
- Terminal: Mattle tin plated leads,solderable per JESD22-B102
- Polarity: As marked on body

## Typical Applications

- Photovoltaic solar cell protection
- Switching power supplies, converters, freewheeling diodes, and reverse battery protection

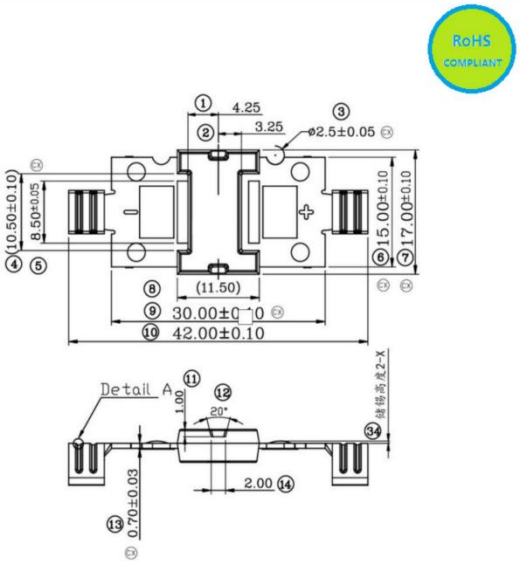


Package Outline Dimensions in Inches (Millimeters)

## Maximum Ratings and Electrical Characteristics

Rating at 25℃ ambient temperature unless otherwise specified.
Single phase, half wave, 60Hz, resistive or inductive load.
For capacitive load, derate current by 20%.

| Characteristics | | SYM | JUM5045-180T1 | Unit |
|---|---|---|---|---|
| Maximum Repetitive Peak Reverse Voltage | | $V_{RRM}$ | 45 | V |
| Maximum RMS Voltage | | $V_{RMS}$ | 31.5 | V |
| Maximum DC Blocking Voltage | | $V_{DC}$ | 45 | V |
| Maximum Average Forward Rectified Current @ Tc=125 ℃ | | $I_{(AV)}$ | 50 | A |
| Peak Forward Surge Current, 8.3mS Single Half Sine-Wave, Superimposed on Rated Load ( JEDEC Method ) | | $I_{FSM}$ | 500 | A |
| Peak Forward Voltage at DC Current (Note 1) | 30A | $V_F$ | 0.5 | V |
| | 40A | | 0.51 | |
| Maximun DC Reverse Current at Rated DC Blocking Voltage | @$T_J$=25℃ | $I_R$ | 0.1 | mA |
| | @$T_J$=100°C | | 15 | |
| Typical Thermal Resistance Junction to Case | | $R_{\theta JC}$ | 1 | ℃/W |
| Junction Temperature Range ( Note2 ) | | $T_J$ | -55 to+200 | ℃ |
| Storage Temperature Range | | $T_{STG}$ | -55 to+150 | ℃ |

Notes: 1. 300uS pulse width, 2%duty cycle.

2. Junction Temperature In DC forward current without reverse bias, ,t≤1 h (Fig.1). Meets the Requirements of IEC 61215 Ed. 2 bypass diode thermal test.

3. The typical data above is for reference only.

Tel:+86 0355-7199555 Email:ZKANRUI@zkanrui.cn
Corporate Office: Floor 2, Building 5, 5G Smart Innovation Park, 53 Baoyuan Road, Luzhou District, Changzhi City, Shanxi Province, China
Sales Center: Room 1107, 11/F, Guokun Huake Tower, No.345 Yanxin Road, Huishan District, Wuxi City, Jiangsu Province, China

| ZKANRUI | Specification number ZKAR2026013 | Diode Product Specification |
|---|---|---|
| Page1,1page in total | Revision A0 | **Shanxi Zhongke Anrui Energy Technology Co., Ltd.** |

# JUM6045-150T2

**Photovoltaic Solar Cell Protection Schottky Diode**

**Bypass Diode for Solar J-Box Forward Current - 60 Amperes**

## Features

- Low power loss, high efficiency
- High current capability, low $V_F$
- High surge capacity
- Guard ring for trasient protection
- For use in solarJ-box as a bypass diode
- Metal of silicon rectifier, majority carrier conduction

## Mechanical Data

- Molded plastic body Molding compound meets UL 94 V-0 flammability rating
- Polarity: Color band denotes cathode
- Mounting position: Any

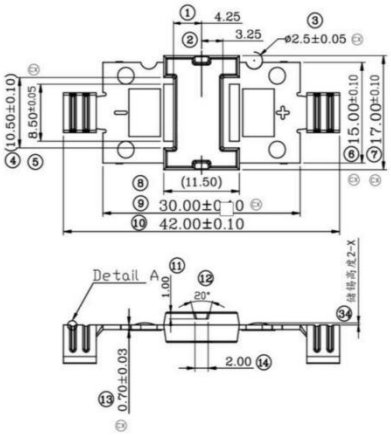


Package Outline Dimensions in Inches (Millimeters)

## Maximum Ratings and Electrical Characteristics

Rating at 25℃ ambient temperature unless otherwise specified.
Single phase, half wave, 60Hz, resistive or inductive load.
For capacitive load, derate current by 20%.

| Characteristics | | SYM | JUM6045-150T2 | Unit |
|---|---|---|---|---|
| Maximum Repetitive Peak Reverse Voltage | | $V_{RRM}$ | 45 | V |
| Maximum RMS Voltage | | $V_{RMS}$ | 31.5 | V |
| Maximum DC Blocking Voltage | | $V_{DC}$ | 45 | V |
| Maximum Average Forward Rectified Current @ Tc=125 °C | | $I_{(AV)}$ | 60 | A |
| Peak Forward Surge Current, 8.3mS Single Half Sine-Wave, Superimposed on Rated Load ( JEDEC Method ) | | $I_{FSM}$ | 500 | A |
| Peak Forward Voltage at 40A DC ( Note1 ) | | $V_F$ | 0.53 | V |
| Maximun DC Reverse Current at Rated DC Blocking Voltage | @$T_J$=25℃ | $I_R$ | 0.12 | mA |
| | @$T_J$=100°C | | 30 | |
| Typical Thermal Resistance Junction to Case | | $R_{\theta JC}$ | 1 | ℃/W |
| Junction Temperature Range | | $T_J$ | -55 to+200 | ℃ |
| Storage Temperature Range | | $T_{STG}$ | -55 to+150 | ℃ |

Notes: 1. 300uS pulse width, 2%duty cycle.
2. The typical data above is for reference only.

Tel:+86 0355-7199555 Email:ZKANRUI@zkanrui.cn
Corporate Office: Floor 2, Building 5, 5G Smart Innovation Park, 53 Baoyuan Road, Luzhou District, Changzhi City, Shanxi Province, China
Sales Center: Room 1107, 11/F, Guokun Huake Tower, No.345 Yanxin Road, Huishan District, Wuxi City, Jiangsu Province, China

# MK5045-150T2

**Photovoltaic Solar Cell Protection Schottky Diode**

**Bypass Diode Module For PV Forward Current - 60 Amperes**

## Features

- Low power loss, high efficiency
- High surge current capabity
- Guardring for overvoltage potection
- High temperature reverse characteristic is excellent
- Trench Schottky Technology
- Metal of silicon rectifier, majority carrier conduction

## Mechanical Data

- Case:QC3Q, Molded plastic body Molding compound meets UL 94 V-0 flammability rating
- Terminal: Mattle tin plated leads,solderable per JESD22-B102
- Polarity: As marked on body
- Weight: 4.86grams(approximately)

## Typical Applications

- Photovoltaic solar cell protection
- Switching power supplies, converters, freewheeling diodes, and reverse battery protection

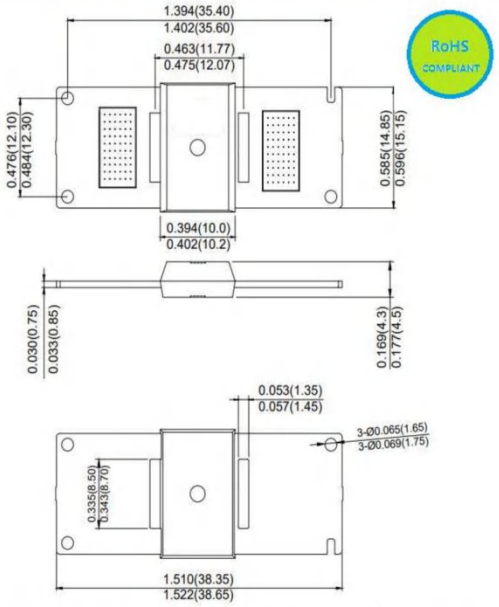


Package Outline Dimensions in Inches (Millimeters)

## Maximum Ratings and Electrical Characteristics

Rating at 25℃ ambient temperature unless otherwise specified.
Single phase, half wave, 60Hz, resistive or inductive load.
For capacitive load, derate current by 20%.

| Characteristics | | SYM | MK5045-150T2 | Unit |
|---|---|---|---|---|
| Maximum Repetitive Peak Reverse Voltage | | $V_{RRM}$ | 45 | V |
| Maximum RMS Voltage | | $V_{RMS}$ | 31.5 | V |
| Maximum DC Blocking Voltage | | $V_{DC}$ | 45 | V |
| Maximum Average Forward Rectified Current @ Tc=125 ℃ | | $I_{(AV)}$ | 60 | A |
| Peak Forward Surge Current, 8.3mS Single Half Sine-Wave, Superimposed on Rated Load ( JEDEC Method ) | | $I_{FSM}$ | 500 | A |
| Peak Forward Voltage at | 40A DC (Note 1) | $V_F$ | 0.53 | V |
| Maximun DC Reverse Current at Rated DC Blocking Voltage | @$T_J$=25℃ | $I_R$ | 0.15 | mA |
| | @$T_J$=100°C | | 20 | |
| Typical Thermal Resistance Junction to Case | | $R_{\theta JC}$ | 1.5 | ℃/W |
| Junction Temperature Range ( Note2 ) | | $T_J$ | -55 to+200 | ℃ |
| Storage Temperature Range | | $T_{STG}$ | -55 to+150 | ℃ |

Notes: 1. 300uS pulse width, 2%duty cycle.

2. Junction Temperature In DC forward current without reverse bias, ,t≤1 h (Fig.1). Meets the Requirements of IEC 61215 Ed. 2 bypass diode thermal test.

3. The typical data above is for reference only.


Tel:+86 0355-7199555 Email:ZKANRUI@zkanrui.cn
Corporate Office: Floor 2, Building 5, 5G Smart Innovation Park, 53 Baoyuan Road, Luzhou District, Changzhi City, Shanxi Province, China
Sales Center: Room 1107, 11/F, Guokun Huake Tower, No.345 Yanxin Road, Huishan District, Wuxi City, Jiangsu Province, China

# MK5045

## Photovoltaic Solar Cell Protection Schottky Diode

## Bypass Diode for Solar J-Box

### Features

- Low power loss, high efficiency
- High current capability, low $V_F$
- High surge capacity
- Guard ring for trasient protection
- For use in solarJ-box as a bypass diode
- Metal of silicon rectifier, majority carrier conduction

### Mechanical Data

- Mounting position: Any
- Polarity: Color band denotes cathode
- MoldingcompoundmeetsUL94V-0
- flammabilityrating

Case:JA005，Moldedplasticbody
MoldingcompoundmeetsUL94V-0 flammabilityrating
Terminals:Tinplatedleads,solderable perJESD22-B102
Polarity:Asmarkedonbody

Case外形：JA005
正极产品：

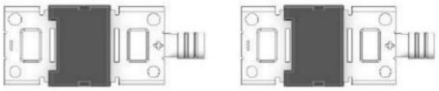

负极产品：

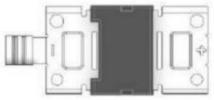

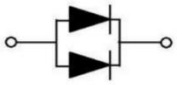

MarkingCode：MK5045

Package Outline Dimensions in Inches (Millimeters)

### Maximum Ratings and Electrical Characteristics

Rating at 25℃ ambient temperature unless otherwise specified.
Single phase, half wave, 60Hz, resistive or inductive load.
For capacitive load, derate current by 20%.

| Characteristics | SYM | MK5045 | Unit |
|---|---|---|---|
| Maximum Repetitive Peak Reverse Voltage | $V_{RRM}$ | 45 | V |
| Maximum Average Forward Rectified Current @ Tc=125 °C | $I_{(AV)}$ | 50 | A |
| Typical Thermal Resistance Junction to Case | $R_{\theta JC}$ | 1 | ℃/W |
| Peak Forward Surge Current, 8.3mS Single Half Sine-Wave, Superimposed on Rated Load ( JEDEC Method ) | $I_{FSM}$ | 700 | A |
| Junction Temperature Range | $T_J$ | -55 to+200 | ℃ |
| Storage Temperature Range | $T_{STG}$ | -55 to+200 | ℃ |

Notes: 1. 300uS pulse width, 2%duty cycle.
2. The typical data above is for reference only.

# 40SQ045

## Photovoltaic Solar Cell Protection Schottky Diode

### Features

- Low power loss, high efficiency
- High current capability, low $V_F$
- High surge capacity
- Guard ring for trasient protection
- For use in solarJ-box as a bypass diode
- Metal of silicon rectifier, majority carrier conduction

### Mechanical Data

- Polarity: Color band denotes cathode
- Mounting position: Any

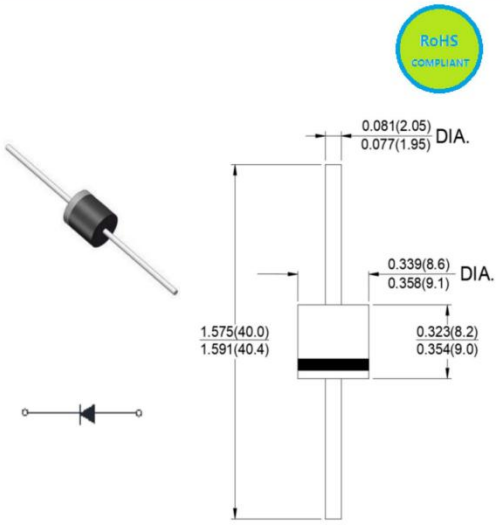


Package Outline Dimensions in Inches (Millimeters)

### Maximum Ratings and Electrical Characteristics

Rating at 25℃ ambient temperature unless otherwise specified.
Single phase, half wave, 60Hz, resistive or inductive load.
For capacitive load, derate current by 20%.

| Characteristics | | SYM | 40SQ045 | Unit |
|---|---|---|---|---|
| Maximum Repetitive Peak Reverse Voltage | | $V_{RRM}$ | 45 | V |
| Maximum RMS Voltage | | $V_{RMS}$ | 31.5 | V |
| Maximum DC Blocking Voltage | | $V_{DC}$ | 45 | V |
| Maximum Average Forward Rectified Current @ Tc=125 °C | | $I_{(AV)}$ | 40 | A |
| Peak Forward Surge Current, 8.3mS Single Half Sine-Wave, Superimposed on Rated Load ( JEDEC Method ) | | $I_{FSM}$ | 500 | A |
| Peak Forward Voltage at 40A DC ( Note1 ) | | $V_F$ | 0.5 | V |
| Maximun DC Reverse Current at Rated DC Blocking Voltage | @$T_J$=25℃ | $I_R$ | 0.1 | mA |
| | @$T_J$=100°C | | 20 | |
| Typical Thermal Resistance Junction to Case | | $R_{\theta JC}$ | 1.5 | ℃/W |
| Junction Temperature Range | | $T_J$ | -55 to+200 | ℃ |
| Storage Temperature Range | | $T_{STG}$ | -55 to+150 | ℃ |

Notes: 1. 300uS pulse width, 2%duty cycle.
2. The typical data above is for reference only.


Tel:+86 0355-7199555 Email:ZKANRUI@zkanrui.cn
Corporate Office: Floor 2, Building 5, 5G Smart Innovation Park, 53 Baoyuan Road, Luzhou District, Changzhi City, Shanxi Province, China
Sales Center: Room 1107, 11/F, Guokun Huake Tower, No.345 Yanxin Road, Huishan District, Wuxi City, Jiangsu Province, China

# 30SQ045

| Photovoltaic Solar Cell Protection Schottky Diode | Bypass Diode for Solar J-Box Forward Current - 30 Amperes |
|---|---|

## Features

- Low power loss, high efficiency
- High current capability, low $V_F$
- High surge capacity
- Guard ring for trasient protection
- For use in solarJ-box as a bypass diode
- Metal of silicon rectifier, majority carrier conduction

## Mechanical Data

- Polarity: Color band denotes cathode
- Mounting position: Any

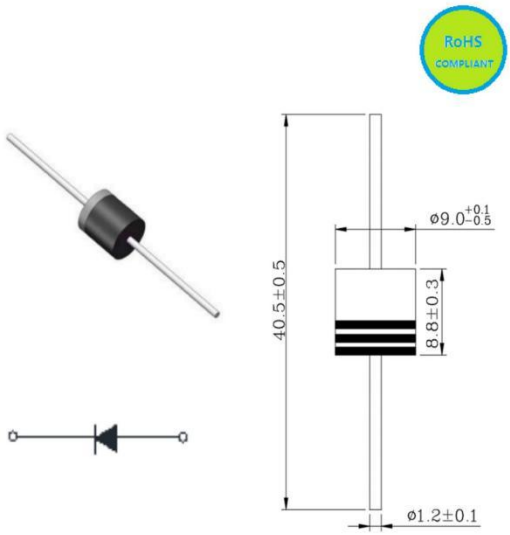


Package Outline Dimensions in Inches (Millimeters)

## Maximum Ratings and Electrical Characteristics

Rating at 25℃ ambient temperature unless otherwise specified.
Single phase, half wave, 60Hz, resistive or inductive load.
For capacitive load, derate current by 20%.

| Characteristics | | SYM | 30SQ045-SL | Unit |
|---|---|---|---|---|
| Maximum Repetitive Peak Reverse Voltage | | $V_{RRM}$ | 50 | V |
| Maximum RMS Voltage | | $V_{RMS}$ | 36 | V |
| Maximum DC Blocking Voltage | | $V_{DC}$ | 50 | V |
| Maximum Average Forward Rectified Current @ Tc=125 °C | | $I_{(AV)}$ | 30 | A |
| Peak Forward Surge Current, 8.3mS Single Half Sine-Wave, Superimposed on Rated Load ( JEDEC Method ) | | $I_{FSM}$ | 300 | A |
| Peak Forward Voltage at 25A DC ( Note1 ) | | $V_F$ | 0.5 | V |
| Maximun DC Reverse Current at Rated DC Blocking Voltage | @50V & $T_J$=25°C | $I_R$ | 0.5 | mA |
| | @40V & $T_J$=100° | | 50 | |
| Typical Thermal Resistance Junction to Case | | $R_{\theta JC}$ | 1.5 | ℃/W |
| Junction Temperature Range | | $T_J$ | -55 to+200 | ℃ |
| Storage Temperature Range | | $T_{STG}$ | -55 to+150 | ℃ |
| ESD | | ESD | 25 | KV |

Notes: 1. 300uS pulse width, 2%duty cycle.
2. The typical data above is for reference only.

| ZKANRUI | Specification number ZKAR2026018 | Diode Product Specification |
|---|---|---|
| Page1,1page in total | Revision A0 | **Shanxi Zhongke Anrui Energy Technology Co., Ltd.** |

# 35SQ045

**Photovoltaic Solar Cell Protection Schottky Diode**

**Bypass Diode for Solar J-Box Forward Current - 35 Amperes**

## Features

- Low power loss, high efficiency
- High current capability, low $V_F$
- High surge capacity
- Guard ring for trasient protection
- For use in solarJ-box as a bypass diode
- Metal of silicon rectifier, majority carrier conduction

## Mechanical Data

- Polarity: Color band denotes cathode
- Mounting position: Any

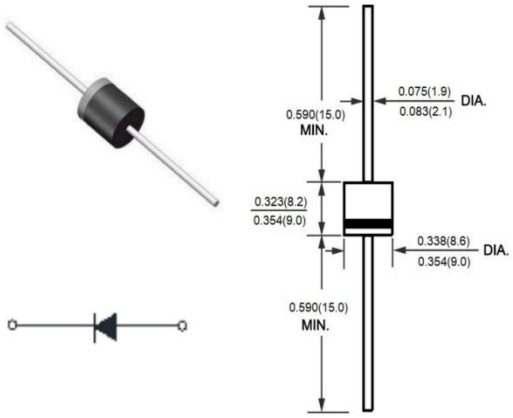


Package Outline Dimensions in Inches (Millimeters)

## Maximum Ratings and Electrical Characteristics

Rating at 25℃ ambient temperature unless otherwise specified.

Single phase, half wave, 60Hz, resistive or inductive load.

For capacitive load, derate current by 20%.

| Characteristics | | SYM | 35SQ045 | Unit |
|---|---|---|---|---|
| Maximum Repetitive Peak Reverse Voltage | | $V_{RRM}$ | 45 | V |
| Maximum RMS Voltage | | $V_{RMS}$ | 31.5 | V |
| Maximum DC Blocking Voltage | | $V_{DC}$ | 45 | V |
| Maximum Average Forward Rectified Current @ Tc=125 °C | | $I_{(AV)}$ | 35 | A |
| Peak Forward Surge Current, 8.3mS Single Half Sine-Wave, Superimposed on Rated Load ( JEDEC Method ) | | $I_{FSM}$ | 450 | A |
| Peak Forward Voltage at 35A DC ( Note1 ) | | $V_F$ | 0.5 | V |
| Maximun DC Reverse Current at Rated DC Blocking Voltage | @$T_J$=25℃ | $I_R$ | 0.08 | mA |
| | @$T_J$=100°C | | 15 | |
| Typical Thermal Resistance Junction to Case | | $R_{\theta JC}$ | 1.5 | ℃/W |
| Junction Temperature Range | | $T_J$ | -55 to+200 | ℃ |
| Storage Temperature Range | | $T_{STG}$ | -55 to+150 | ℃ |

Notes: 1. 300uS pulse width, 2%duty cycle.

2. The typical data above is for reference only.

Tel:+86 0355-7199555 Email:ZKANRUI@zkanrui.cn
Corporate Office: Floor 2, Building 5, 5G Smart Innovation Park, 53 Baoyuan Road, Luzhou District, Changzhi City, Shanxi Province, China
Sales Center: Room 1107, 11/F, Guokun Huake Tower, No.345 Yanxin Road, Huishan District, Wuxi City, Jiangsu Province, China